COMPACT RECHARGEABLE TYRE INFLATOR & POWERBANK WITH WORK LIGHT

MODEL NO: **CTI120**

Thank you for purchasing a Sealey product. Manufactured to a high standard, this product will, if used according to these instructions, and properly maintained, give you years of trouble free performance.

IMPORTANT: PLEASE READ THESE INSTRUCTIONS CAREFULLY. NOTE THE SAFE OPERATIONAL REQUIREMENTS, WARNINGS & CAUTIONS. USE THE PRODUCT CORRECTLY AND WITH CARE FOR THE PURPOSE FOR WHICH IT IS INTENDED. FAILURE TO DO SO MAY CAUSE DAMAGE AND/OR PERSONAL INJURY AND WILL INVALIDATE THE WARRANTY. KEEP THESE INSTRUCTIONS SAFE FOR FUTURE USE.



Refer to instructions

1. SAFETY

❑ **WARNING!** Read operation instructions before use.
× **DO NOT** leave the unit unattended while in operation.
✓ Check capacity and maximum inflation pressure of inflatable before commencing inflation.
✓ Monitor the pressure gauge while in operation.
✓ The gauge should be used as an indication of pressure only. We recommend the use of a dial pressure gauge for definitive reading.
❑ **WARNING!** This inflator is capable of producing a high pressure.
× **DO NOT** inflate any item beyond its maximum capacity.
× **DO NOT** direct inflation hose connector head at yourself, others or animals.
× **DO NOT** carry by the hose, or yank the hose from an inflation valve.
× **DO NOT** pull the power cable from the vehicle accessory socket by the power lead.
× **DO NOT** get wet or use in the rain.
× **DO NOT** use for a task it was not designed to perform.
× **DO NOT** operate the if any parts are missing as this may cause failure or possible personal injury.
× **DO NOT** open the unit.
✓ Keep children and non essential persons away from the inflation area.
✓ Keep clean and in good condition.
✓ Avoid bending the hose during inflation.
✓ Turn off the immediately if overheating or any abnormality is observed during operation.
✓ If no there is no preset pressure value, **DO NOT** leave the pump unattended during inflation to prevent the air pressure getting too high.
✓ Keep the inflator away from any flammable or combustible objects during operation, since the built-in DC motor may generate sparks
✓ Keep away from moisture, sand and shock.
× **DO NOT** store in extremely cold or hot places. That will shorten product life, damage battery, or deform the structure.
✓ Avoid using strong chemicals or detergents to clean the product.
× **DO NOT** disassemble the product. **DO NOT** throw the product into fire or household waste.
× **DO NOT** let children use the product.
× **DO NOT** insert the hose into mouth, ears,or eyes of humans or animals. It must not be used as a toy.
✓ This inflator is not designed for continuous use. Operation over an extended period of time will overheat the unit and cause damage. It should not be used continuously for more than 30 minutes. After 30 minutes, turn it off and let it cool for 15 minutes before resuming operation.



© Jack Sealey Limited

2. INTRODUCTION

Compact digital tyre inflator with output of 12L/min. Pressure gauge reads up to 120psi (kPa, kg/cm² and bar equivalents). 140mm Extension tube with Schrader connection. Micro USB rechargeable (cable supplied). USB output for charging mobile phone etc. (5V/2A). Supplied with sports ball pin adaptor, balloon/inflatables adaptor and also a Presta valve adaptor for road bicycle tyres. Built-in 1W SMD LED for ease of use at night. Preset the desired psi to begin operation and unit will cut-out automatically once that pressure is reached. Auto cut-out if hose kinks, to avoid damage to pump.

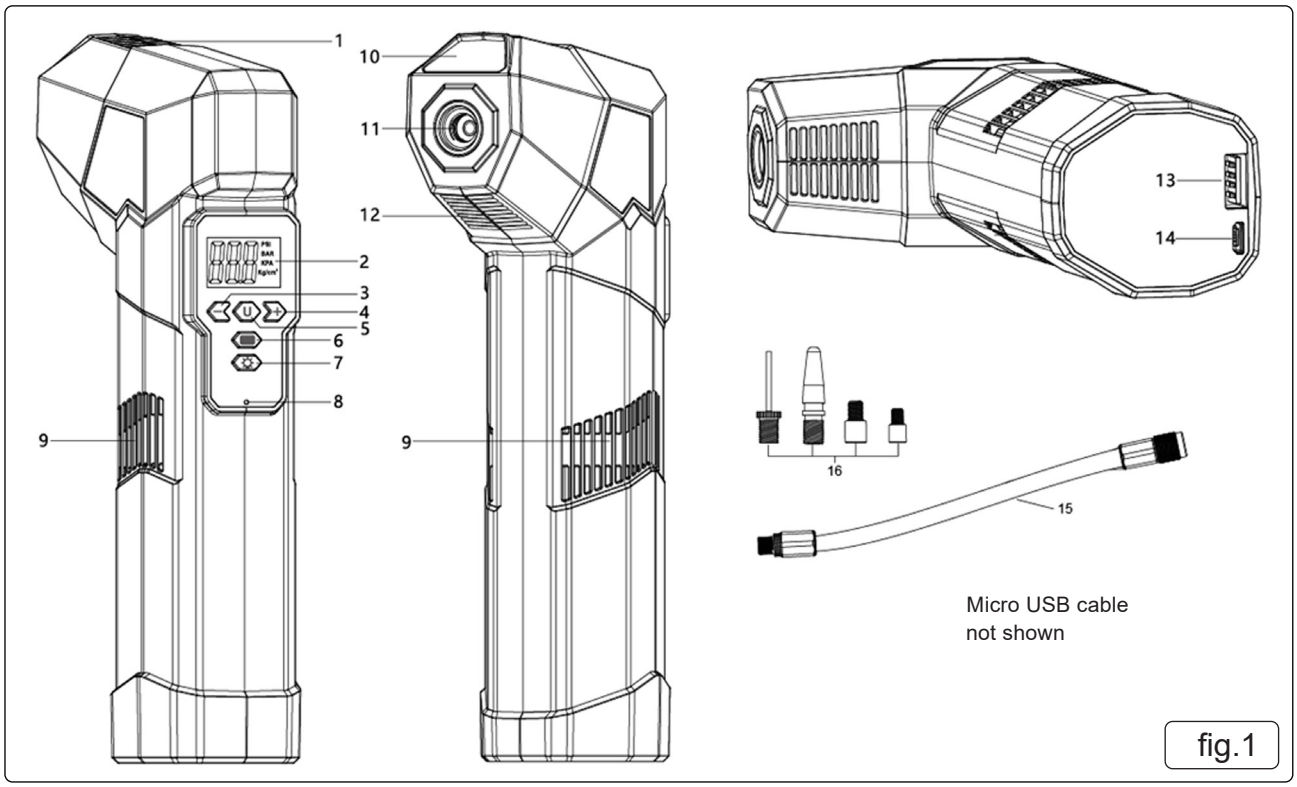

fig.1

1.Outlet Grid	2. Pressure gauge	3. Reduce button	4.Increase Button
5.Unit Button	6.Start/Stop button	7.LED Lighting button	8.Indicator
9. Inlet grid	10.LED Lighting	11.Hose Connector	12.Outlet Grid
13. USB output port	14.Micro USB input port	15. Air hose	16. 4×Valve adapters

3. SPECIFICATION

Model No: CTI120
Hose Length:..... 140mm
Typical Inflation Time: ..... 0-30psi in 619sec (175/70/R13)
Maximum Pressure: 120psi
Airflow: 0.42cfm/12L/min
USB Output:..... 5V/2A
Battery: 2000mAh/22.2Wh

4. OPERATION

4.1. CHARGING

4.1.1. Please charge the battery fully before use (fig.2). Especially for the first time or after it is unused for a long time. Charge for about 4 hours for full charge. Other functions of the product are not available during charging.

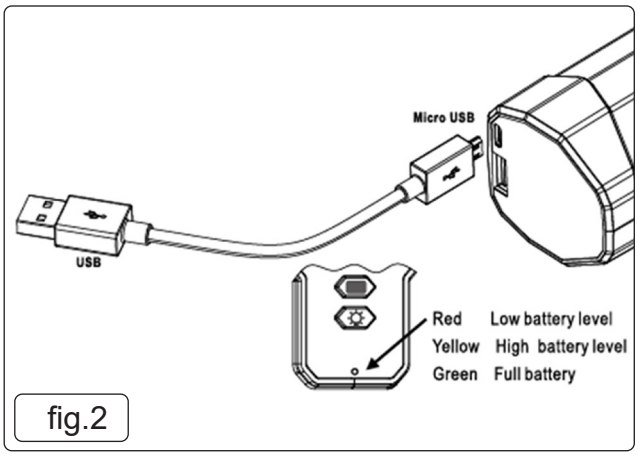

fig.2

4.2. USING THE USB CHARGING PORT

4.2.1. USB output of CTI120 is plug and play.

4.2.2. The air pump will not work, when you are charging a device from the tyre inflator. The USB output will turn off automatically.

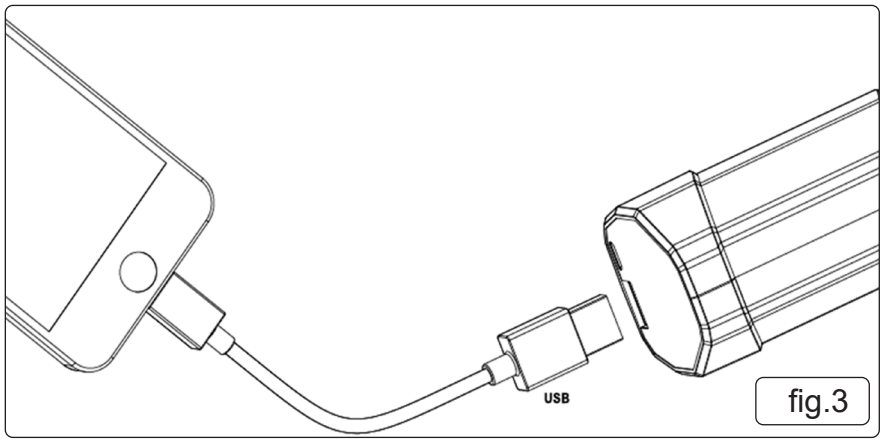

fig.3

© Jack Sealey Limited

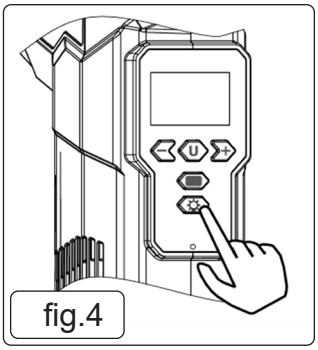
fig.4

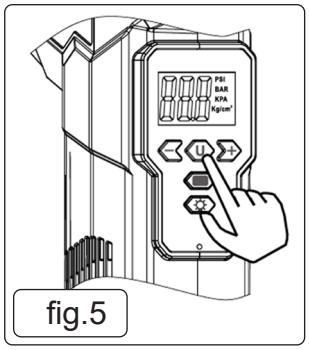
fig.5

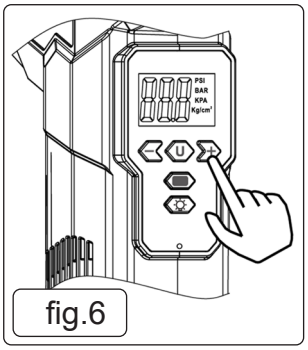
fig.6

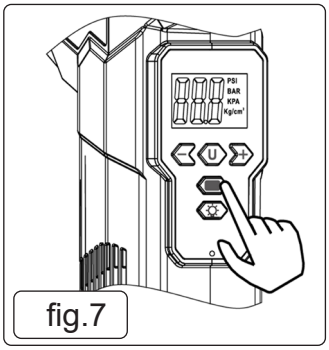
fig.7

4.3. USING THE LED LIGHT

4.3.1. Press the LED light button once (fig.4) to turn on the light. Press the button twice for a slow flash, and three times for a SOS flashing light pattern.

4.4. SETTING THE PRESSURE

NOTE: When the pre-set value is lower than the value of peripheral pressure, the air pump cannot be activated.

- CTI120 has an integrated mechanism for temperature protection. Self-protection will be activated to stop external inflation when the temperature exceeds -15°C to 55°C. It should not be used continuously for more than 30 minutes. After 30 minutes, turn it off and let it cool for 15 minutes before resuming operation.
- A recommended inflation range is labelled on the side of tyre.

4.4.1. Turn on the pressure gauge by pressing the 'U' button (fig.5).

4.5. SELECT PRESSURE UNIT

After turning on the pressure gauge, press the 'U' button (fig.5) again to select the air pressure units on the display.

NOTE: Conversion relationship of related units is as follow

1PSI = 6.89KPA 1BAR = 100KPA 1Kg/cm² = 98KPA

4.5.1. To set the output pressure value press the + or - buttons (fig.6).

4.6. INFLATION

Connect the inflatable object as shown below.

4.6.1. Press the start/stop button (fig.7) to start inflating. When the air pressure in the inflated object reaches the preset air pressure value, the air pump stops inflating automatically.

4.6.2. Press the start/stop button can pause during the inflation, then press again to resume.

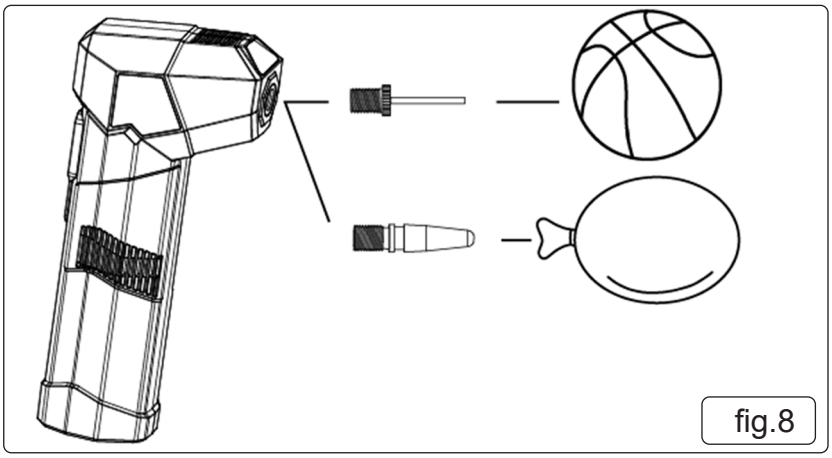
fig.8

ENVIRONMENT PROTECTION

Recycle unwanted materials instead of disposing of them as waste. All tools, accessories and packaging should be sorted, taken to a recycling centre and disposed of in a manner which is compatible with the environment. When the product becomes completely unserviceable and requires disposal, drain any fluids (if applicable) into approved containers and dispose of the product and fluids according to local regulations.

WEEE REGULATIONS

Dispose of this product at the end of its working life in compliance with the EU Directive on Waste Electrical and Electronic Equipment (WEEE). When the product is no longer required, it must be disposed of in an environmentally protective way. Contact your local solid waste authority for recycling information.

Note: It is our policy to continually improve products and as such we reserve the right to alter data, specifications and component parts without prior notice.

Important: No Liability is accepted for incorrect use of this product.

Warranty: Guarantee is 12 months from purchase date, proof of which is required for any claim.

Jack Sealey Ltd t/a Sealey Group, Kempson Way, Suffolk Business Park, Bury St Edmunds, Suffolk, IP32 7AR UK
Jack Sealey (EU) Ltd t/a Sealey Group, Farney Street, Carrickmacross, Co. Monaghan, A81 PK68 Ireland
Tel: 01284 757500 ▪ **Email:** sales@sealey.co.uk ▪ **Web:** www.sealey.co.uk

© Jack Sealey Limited